KÄRCHER

# WV 1 Plus

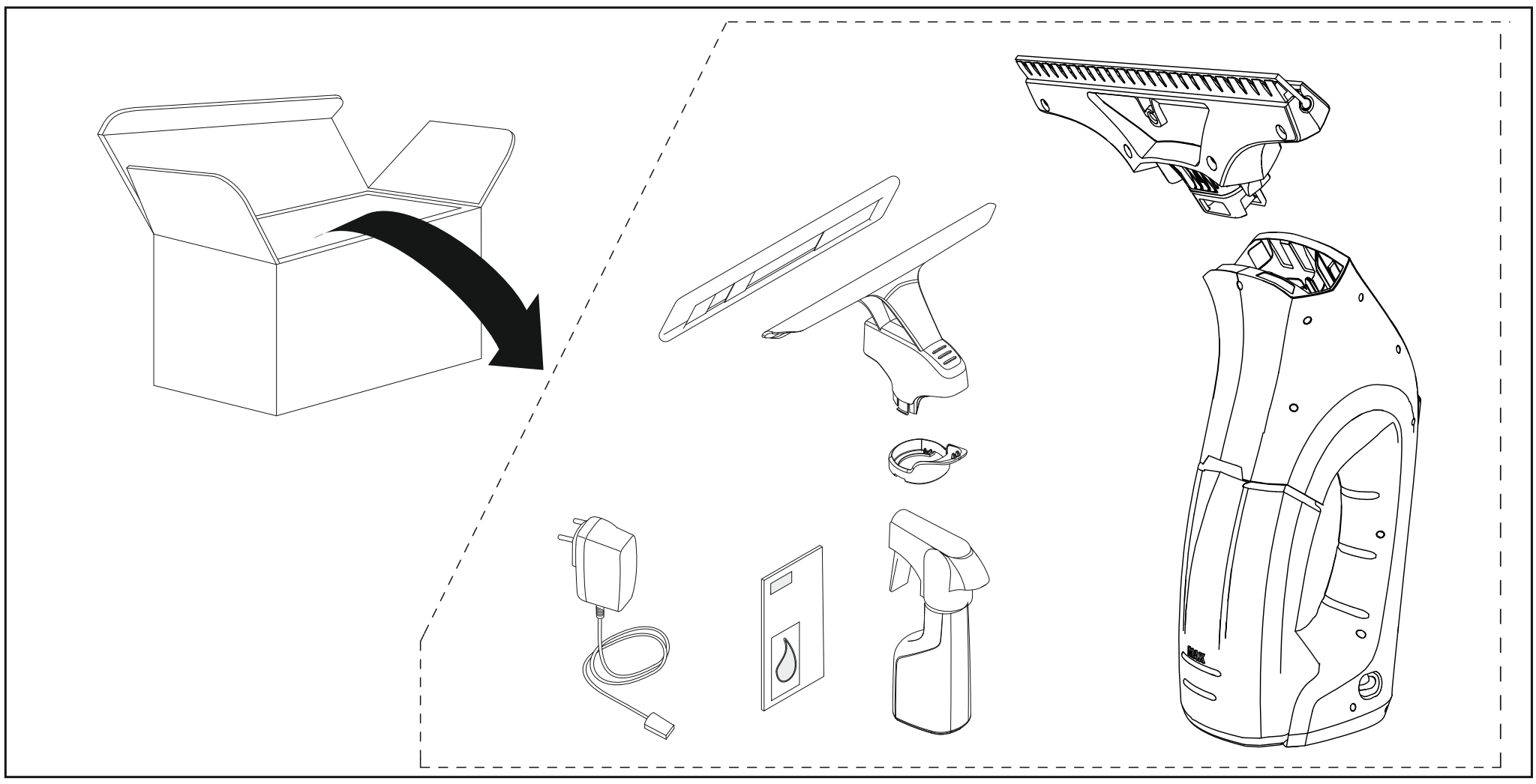

| | | | | | |
|---|---|---|---|---|---|
| [V⎓] Li-Ion | 3,7 V | | IP X4 | | 0,50 kg |
| nom | 10 W | | 100 ml | 100% | 90 min |
| | V 5,5 / mA 600 | | 51 db(A) | 100% | 20 min |

EAC

59671620 (09/17)

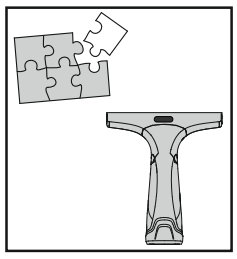

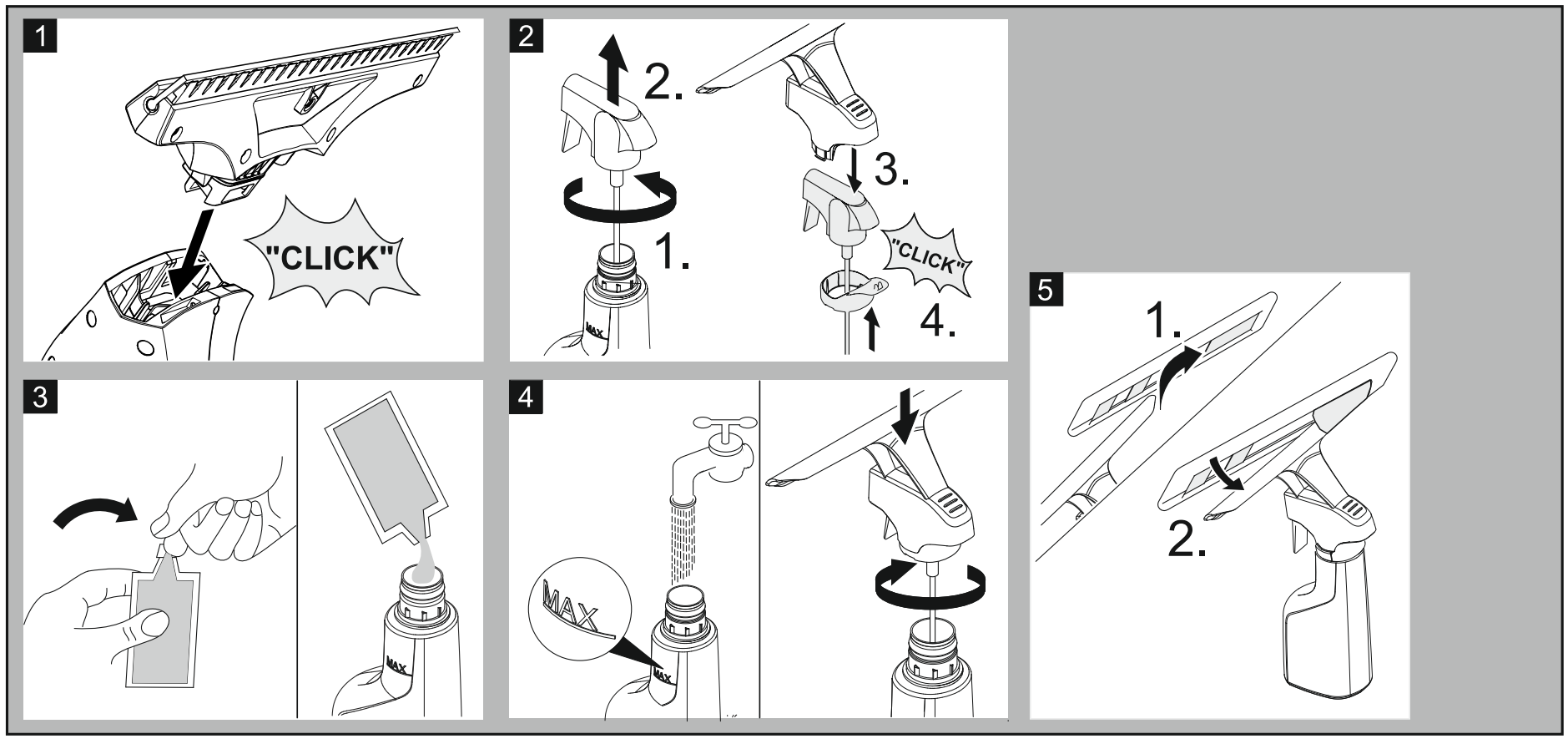
1
"CLICK"
2
2.
1.
3.
"CLICK"
4.
3
MAX
4
MAX
5
1.
2.

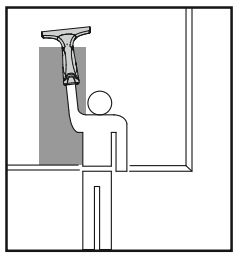

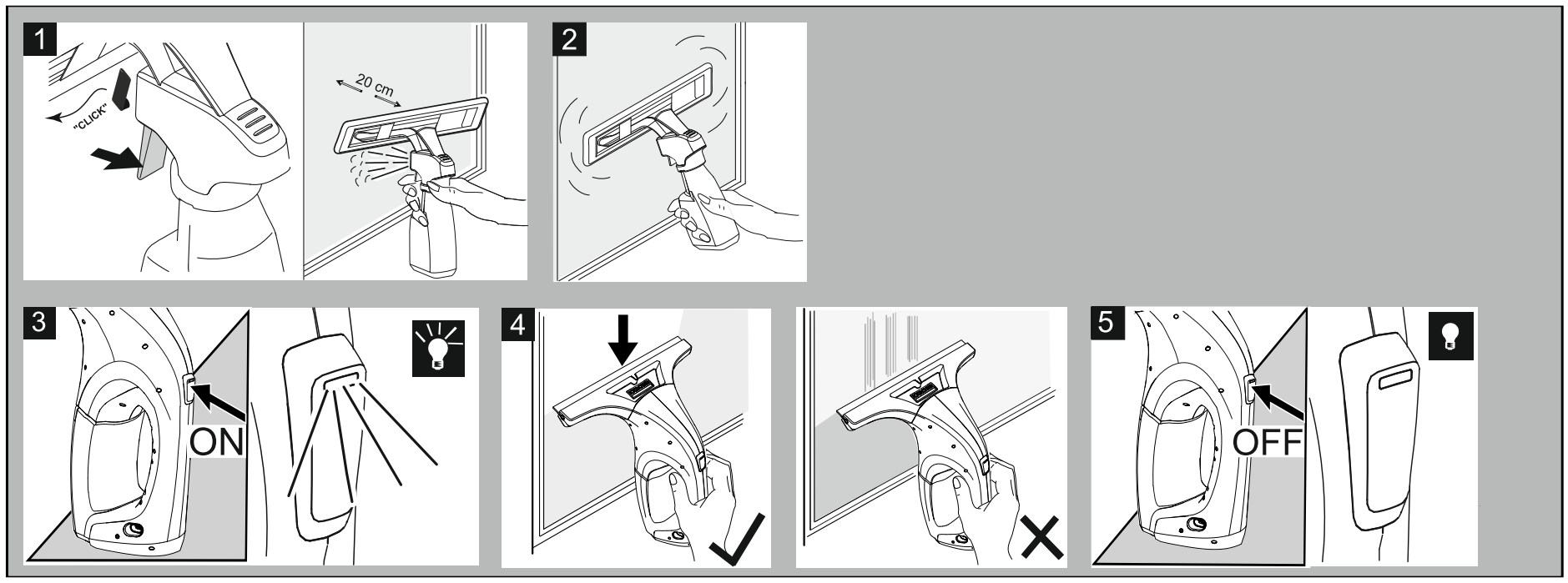
1
"CLICK"
20 cm
2
3
ON
4
5
OFF

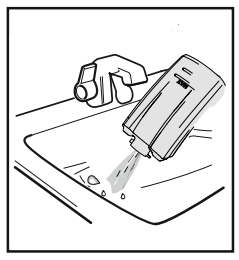

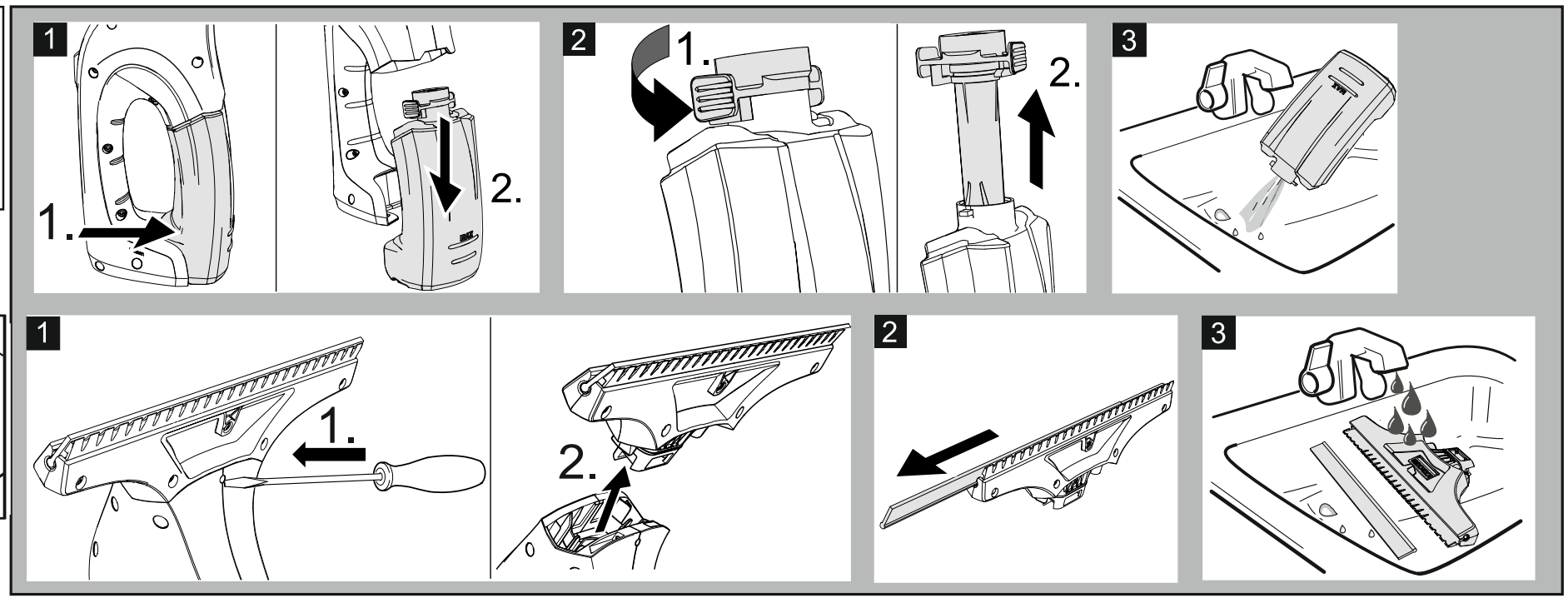
1
1.
2.
2
1.
2.
3

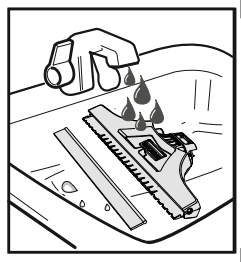


1
1.
2.
2
3

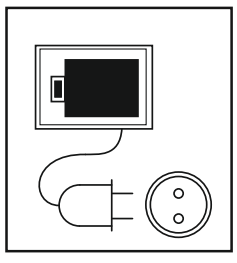

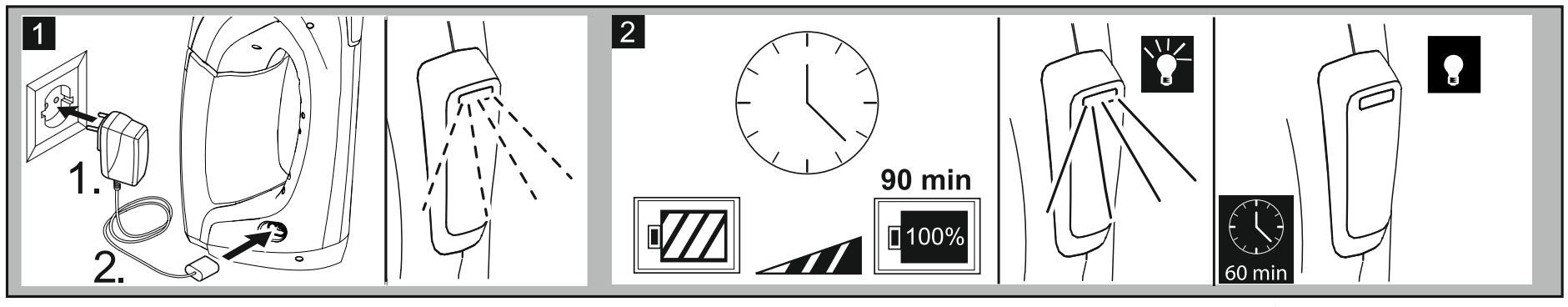
1
1.
2.
2
90 min
100%
60 min

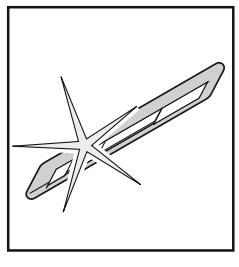

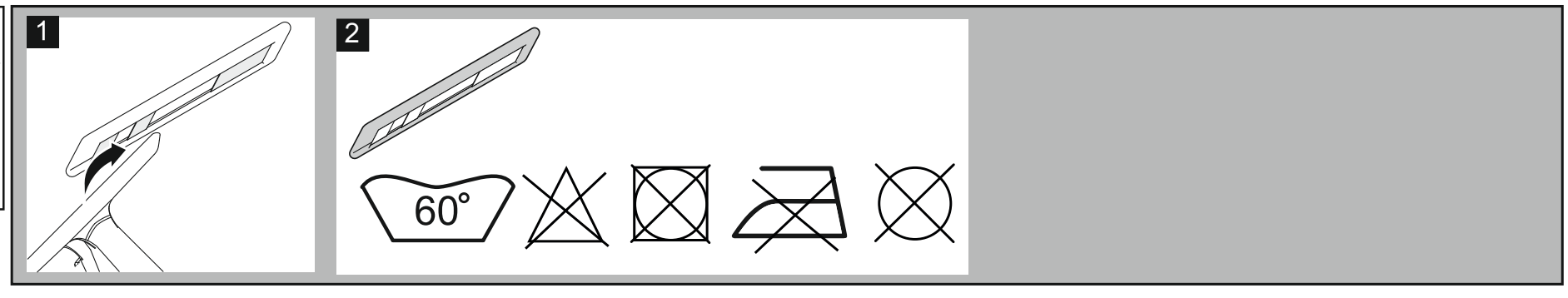
1
2
60°